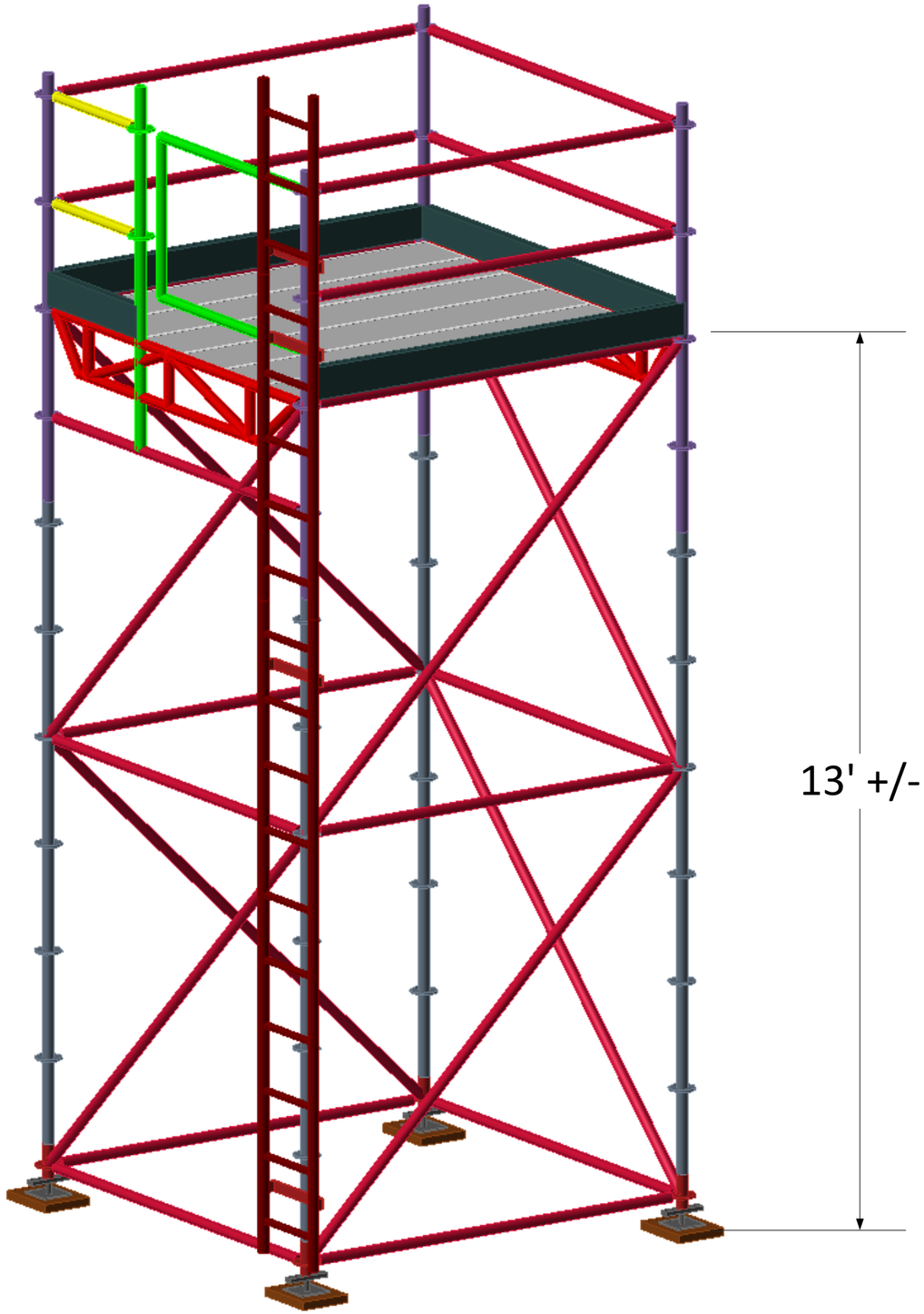

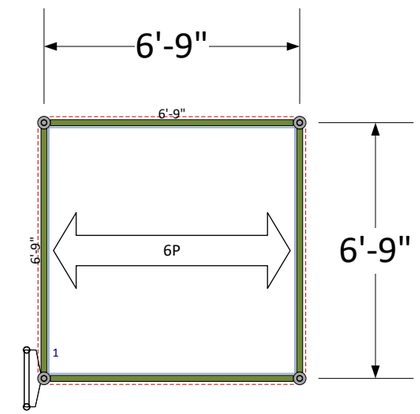

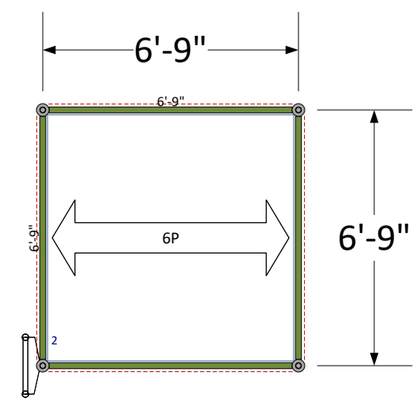

BREWER EQUIPMENT CO. SCAFFOLD SERVICES	CONCEPT DESIGN FOR QUOTATION	
	Pipe Access	
By: Kyle Violette	Goodyear - Fayetteville, NC	
Nov 3, 2023	Shoe Maker Rigging	
Scale: 1/4" = 1'	Drawing No.: 23GDB0552	Sheet: 1 of 1

Brewer Equipment Co.
Scaffold Services
4611 W. Market St.
Greensboro, NC 27407
O: (336) 292-6737

BREWER EQUIPMENT CO.
SCAFFOLD SERVICES
Providing scaffolding since 1951

Scaffold Quote

Prepared By: Dan Bierlein
C: (919) 495-8907
dan@brewerequipmentco.com

Customer	Shoemaker Rigging	Job Site	Goodyear - Fayetteville
Account#	TBD or CC	Job Address	6650 Ramsey St
Scaffold	Pipe Access		Fayetteville, NC 28311
Date	11/6/2023	Contact Name	Chip Parson
Quote	23GDB0552	Phone #	(330) 780-6305
		Email Address	chip.parson@shoemakerrigging.com

Job Description

Brewer Equipment Co. (BEC) will furnish, install, and dismantle one time two scaffolds on the roof of Goodyear in Fayetteville, NC. The scaffolds will be approximately 6'9" wide by 6'9" long and 13' tall. A work platform will be installed on the top elevation rated for 25 PSF evenly distributed. A scaffold ladder with swing gate will provide access to the work platform. Refer to attached bid drawing of additional details.

Equipment will be delivered by BEC and off loaded using Customer supplied forklift. The equipment will be lifted to the roof using customer supplied forklift and hand loaded onto carts to be transported to the base of the scaffold. The same accommodations apply for the dismantle.

Labor prices are at straight time rates and includes travel to and from the site, and site specific 30-minute orientation. Any changes or delays will be invoiced at current Time & Material rates.

Pricing Information

Rental Rate (4 week minimum)	**$**	**370.00**
Installation & Dismantle Labor	**$**	**4,300.00**
Delivery & Pick Up Fee	**$**	**370.00**
Estimated Sales Tax - 7%	**$**	**352.80**
Scaffold Project Total	**$**	**5,392.80**
Daily Rental (after initial 4 weeks) with Tax	**$**	**14.14**

This quotation is based on compliance with CFR 1926 Subpart L, Scaffolds of the OSHA Regulations

General Terms and Conditions

Unless otherwise specified, our price does not include an allowance for training or orientation that may be required to work at the jobsite, labor to inspect or modify the scaffold during the project, or labor and equipment required to demobilize the equipment and load it for return shipment in the event you elect to dismantle the scaffolding with your manpower. Charges for, but not limited to, this type of out of scope work will be at our standard hourly billing rates and per diem charges in place at the time. No other work is to take place above or below the scaffolding during the installation or dismantling phases of the project. All foreign debris, including asbestos and EIFS, that accumulates on the scaffolding during the project must be removed prior to the dismantling phase. The area to receive scaffold is to remain free and clear of all obstructions on the ground and in the air that could interfere with our ability to erect the scaffold safely and as designed. Quotation assumes that the equipment can be unloaded and staged reasonably close to the area of assembly. Terms of payment are net 30 days, with no retainage upon approved credit.

This quotation is valid for 30 days.

Accepted By: _____

Signature Date

Purchase Order # _____ Job Number _____

PROUD MEMBER SAIA SCAFFOLD & ACCESS INDUSTRY ASSOCIATION